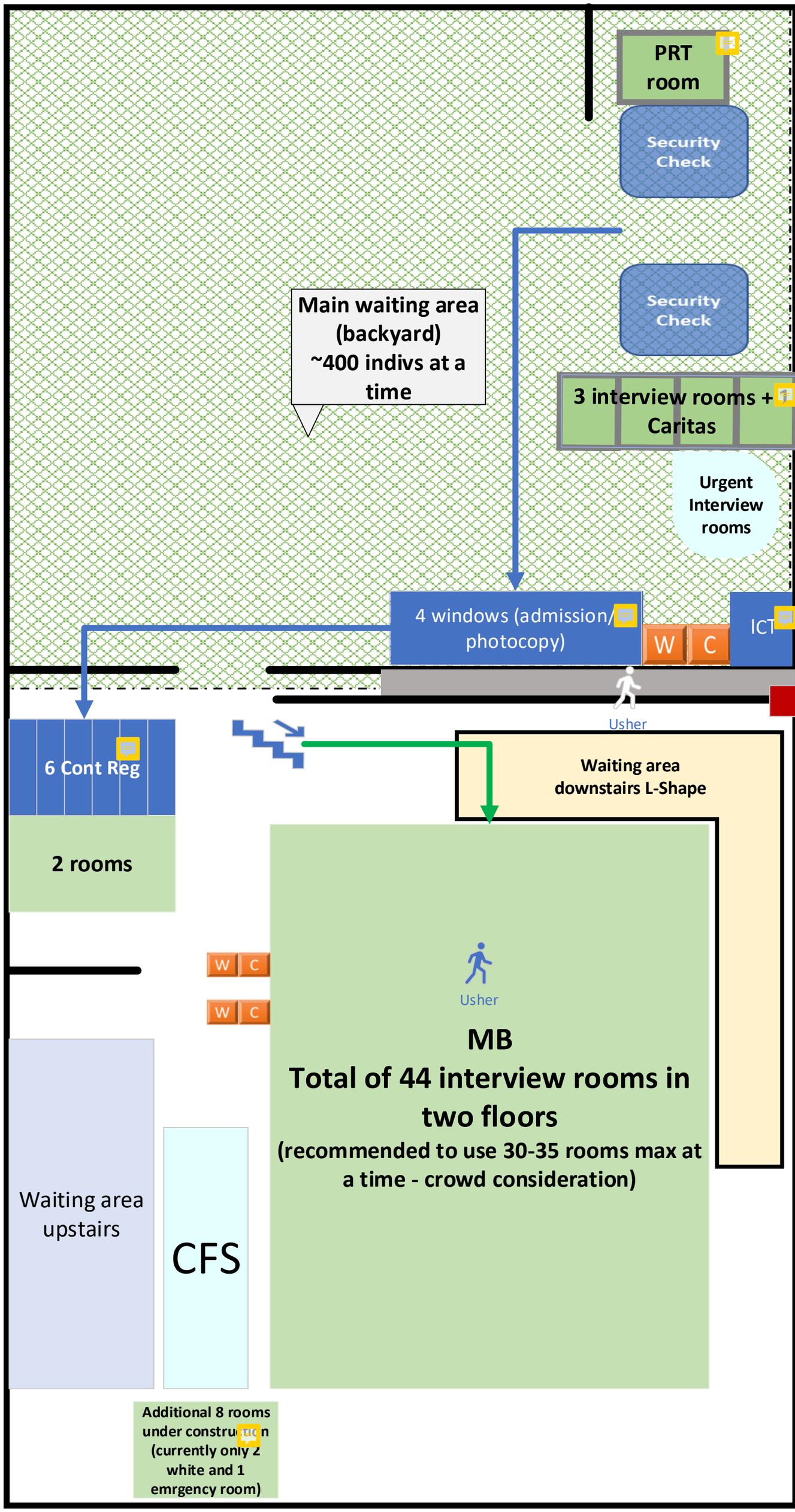
PRT room
Security Check
Entry
Security Check
Entry
Main waiting area (backyard) ~400 indivs at a time
3 interview rooms + Caritas
Urgent Interview rooms
4 windows (admission/ photocopy)
W
C
ICT
Usher
Exit
6 Cont Reg
2 rooms
Waiting area downstairs L-Shape
W
C
W
C
Usher
MB
Total of 44 interview rooms in two floors
(recommended to use 30-35 rooms max at a time - crowd consideration)
Waiting area upstairs
CFS
Additional 8 rooms under construction (currently only 2 white and 1 emrgency room)

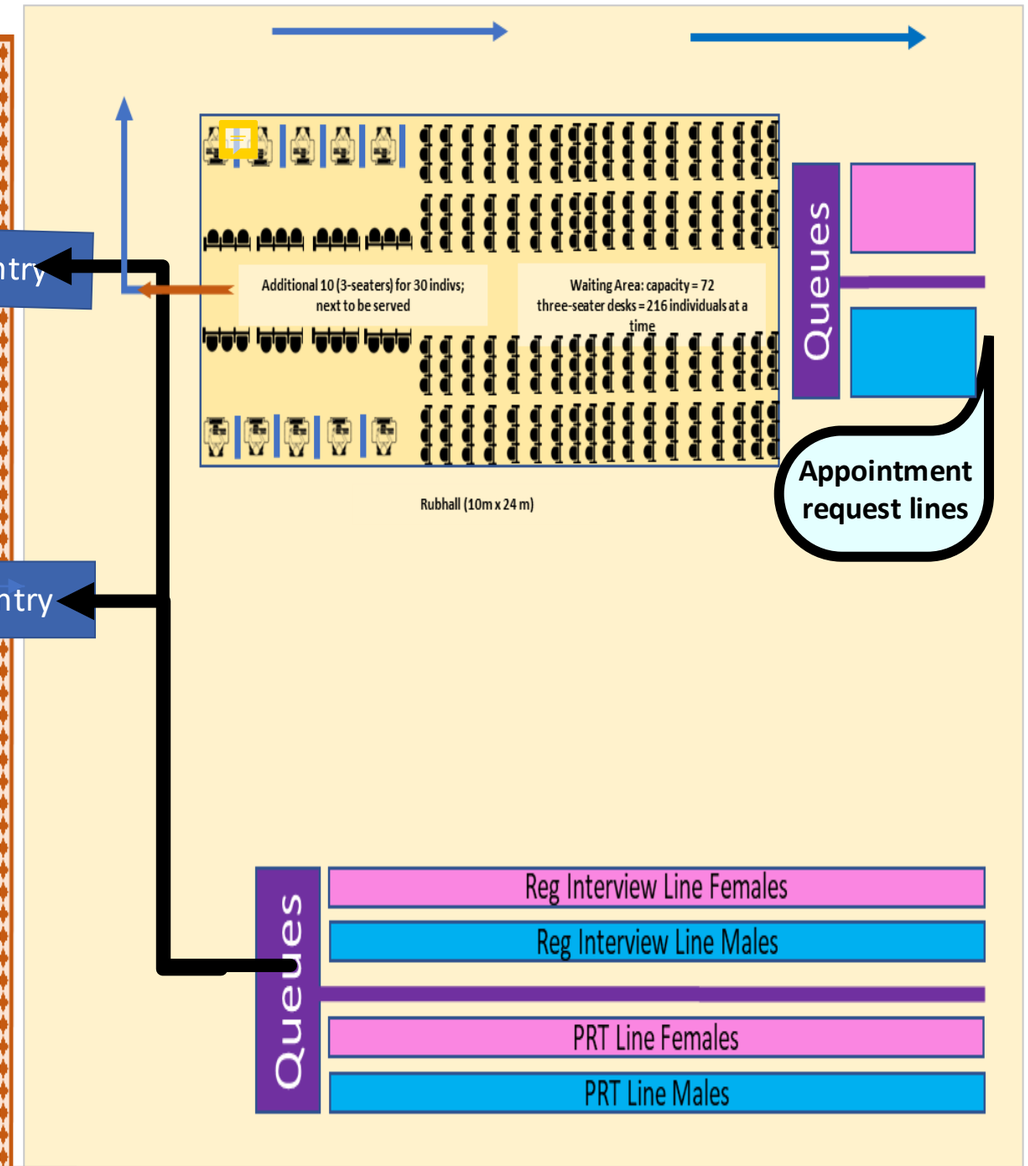
Additional 10 (3-seaters) for 30 indivs; next to be served
Waiting Area: capacity = 72 three-seater desks = 216 individuals at a time
Rubhall (10m x 24 m)
Queues
Appointment request lines
Queues
Reg Interview Line Females
Reg Interview Line Males
PRT Line Females
PRT Line Males

Police Task force
Unused building